5.0GXiE-270-R

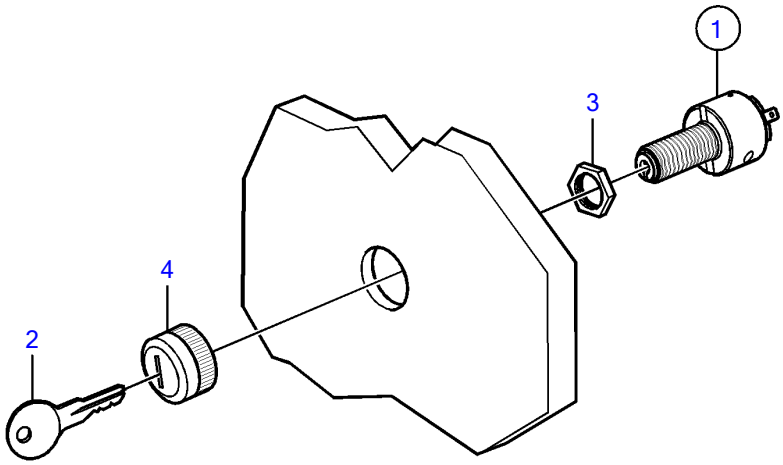

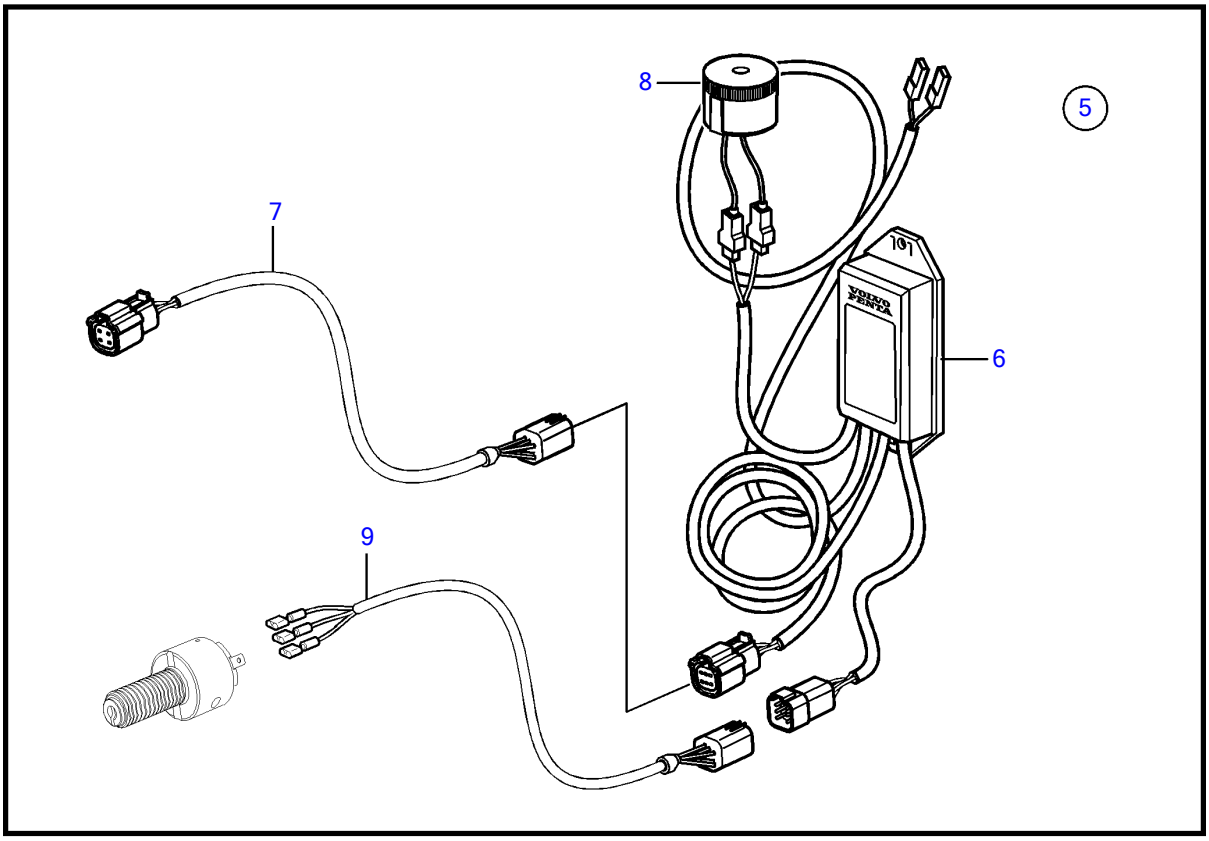

5.0GXiE-270-R

REF	PART NO.	QTY	DESCRIPTION	NOTES
1	856659	1	Starter switch	
2		2	▪ Key	not sold separately
3		1	▪ Nut	not sold separately
4		1	▪ Front ring	not sold separately
5	21461496	1	Network adapter	Analogue key interface
6		1	▪ Network adapter	not sold separately
7	21421946	1	▪ Cable	To starboard key
8	3817974	1	Alarm	
9	21542459	1	Wiring harness	Key switch